GROOMERS WORLD

SERVICE MANUAL

SINGLE MOTOR FORCE DRYER

WITH HEAT

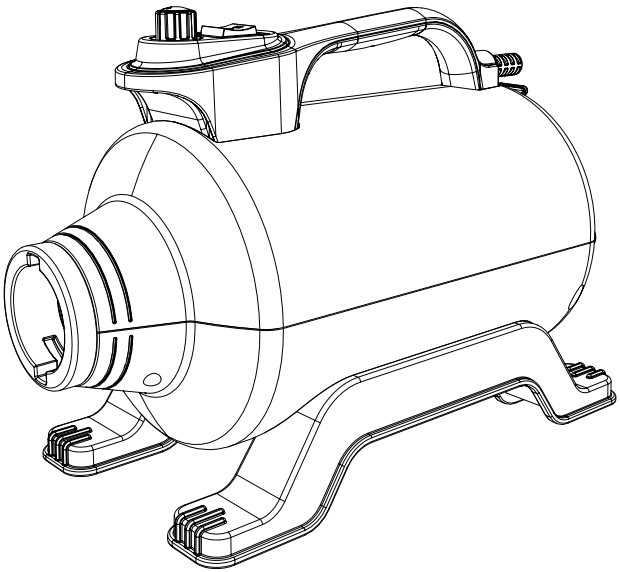

Manual Ref: SHD-2800P | 17/11/2026

INTRODUCTION

- Portable, compact, and easy to transport and store. The breakthrough technology brings quiet, insulated operation to improve productivity in grooming shops and business. Lightweight and powerful also for home use, shows or mobile groomers.
- Variable-speed controller can easily adjust wind speed and air volume.
- New streamlined appearance design possesses modernized style and beautiful shape contour.
- Motor Life Span has been extended
- 3pcs Heavy duty blower nozzles for different pet drying applications.
- High impact and rugged ABS housing material.
- Easy-to-change and washable filter.
- A better air flow system and a smaller flow friction force, has allow the New GROOMERS WORLD Single Motor with Heat to perform at a higher energy ratio.

GROOMERS WORLD

GW Equipment LTD

info@groomersworld.co.uk

Direction for Use

1. Plug the flexible hose to the front cap connector.
2. Plug in socket with right voltage, Please be sure to grip the hose connector before turn on the switch, or else it will be damaged due to fiercely swing. switch power on during the process of drying, warm air is available, if you need high temperature, just switch to .
3. Adjust wing speed, turn on or off the heating switch and choose suitable nozzle according to your need.
4. Turn off the power switch after usage.
5. Unplug the dryer from the mains, unplug the hose and nozzle, and put the machine and accessories back to box.

Correct Disposal of this product

This marking indicates that this product should not be disposed with other household wastes throughout the EU. To prevent possible harm to the environment or human health from uncontrolled waste disposal, recycle it responsibly to promote the sustainable reuse of material resources. To return your used device, please use the return and collection systems or contact the retailer where the product was purchased. They can take this product for environmental safe recycling.

Safety Instruction

- Force dryer needs a single outlet which is at least 15A (25A in 110V territories) and has ground wire or itself. Please connect force dryer with a correct outlet and do not share with other appliances.
- Before switch on or turn off the power every time. Please adjust the wind to the lowest speed, this can extend the lifetime of the machine.
- Do not insert pins or any metal things into the clearance of the machine, otherwise that would be easy to get an electric shock and short circuit.
- Do not use a cloth or bag to stop the diffuser or foam filter, otherwise it would damage the machine.
- If the machine has been used for some time and malfunction occurs, you must ask the professional person to repair it. Do not disassemble by yourself.
- If the power cord is damaged, discontinue and inform professors.
- Please keep children away when you operate the machine.
- Do not hit the housing with fierce shock or drop the machine from high, which will damage the frame and motor.
- Cardiopath or people with pacemaker are forbidden to use this machine.
- Please hold the nozzle and hose firmly before turning the machine on, or the hose may wiggle and cause injury.
- It's strictly forbidden to touch the components in the front of cap connector with hand or any other objects in any situation.
- Appliance is not intended for use by persons (including children) with reduced physical, sensory or mental capabilities, or lack of experiences and knowledge, unless they have been given supervision or instruction concerning use of the appliance by a person responsible for their safety.
- Children should be supervised to ensure that they do not play with appliance.
- If the supply cord is damaged, it must be replaced by the manufacturer or its service agent or a similarly qualified person in order to avoid a hazard.

Structure Chart & Accessories

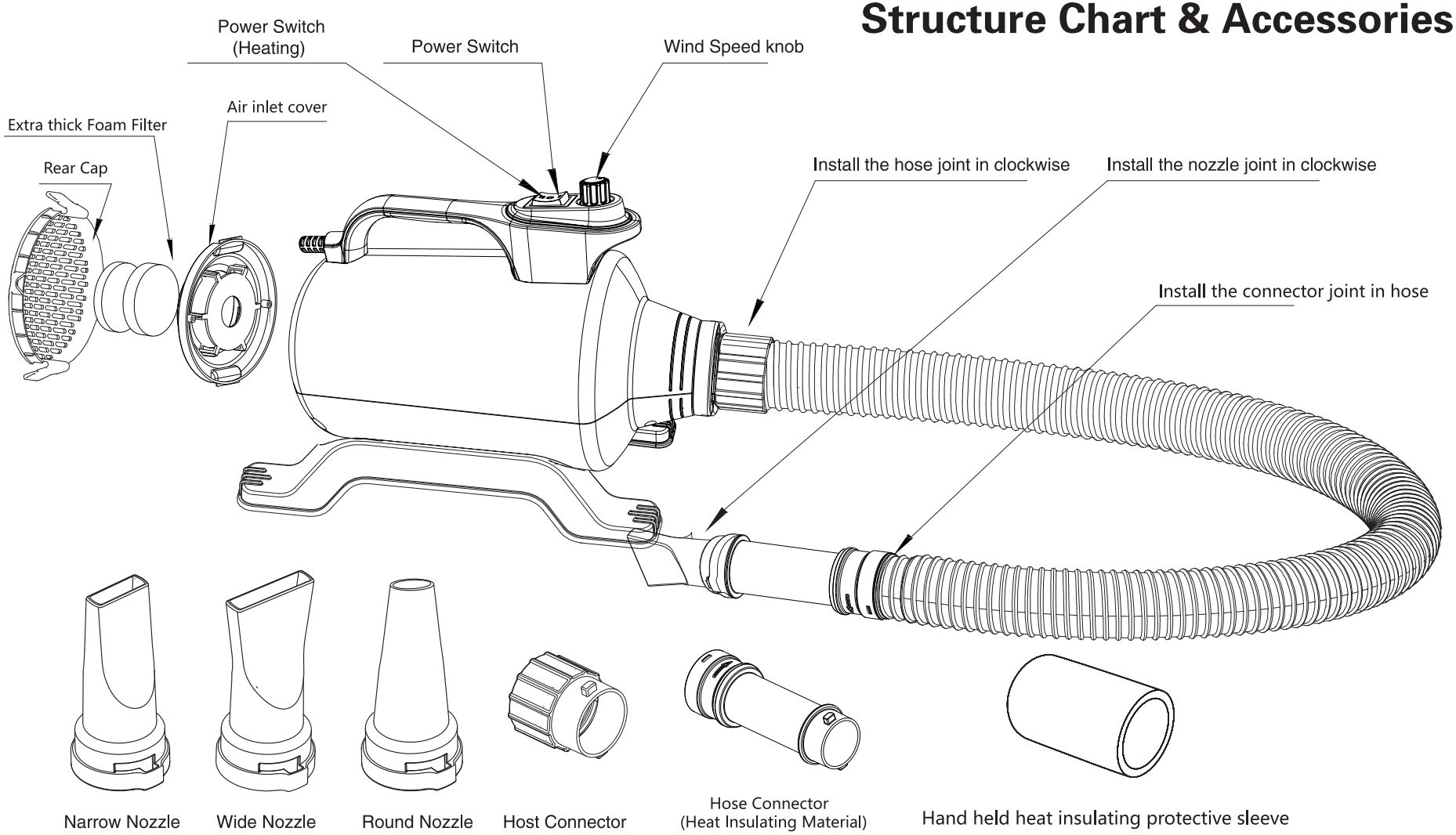

Force Dryer Buying Guide

ITEM NO.	MAX POWER	HEAT POWER	BLOW FORCE	MAX SPEED	Max Airflow	Temperature Rise	NOISE	NW.
GW SHD 2800P	2800W	600W	900g	525MPM 66,000FPM	7 CBM 290 CFM	56℃ 133℉	74 dB	4.9kg 11.1lb

Dryer Accessories List



Wall Bracket for GW SHD 2800P





Groomer´s Third Arm

ONE YEAR WARRANTY Guarantees - The GROOMERS WORLD with heat are guaranteed against defects, materials and workmanship for one year from the original date of purchase. Should any components become inoperative due to defects in materials or workmanship during the one year warranty period, industries will repair the dryer free of charge subject to the limitations below. For warranty services of your GROOMERS WORLD Force Dryers with Heat please ship to GW Equipment.

Warranty Limitations: Warranty does not cover shipping or transportation costs. Warranty applies to original purchaser only. Proof of date of purchase is required. Warranty is void if registration card is not mailed within 30 days of purchase or delivery. Warranty does not include replacement of carbon brush and rotor, parts. Warranty does not cover abuse, accidents, acts of war, droppage, improper voltage, disassembly, repaired or serviced by anyone except **GW Equipment** are authorized service, the warranty will void.

Ease of Use

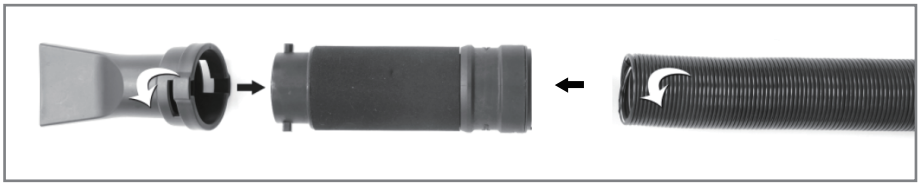

Install the nozzle joint in clockwise

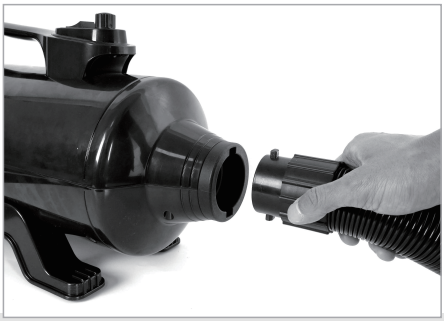

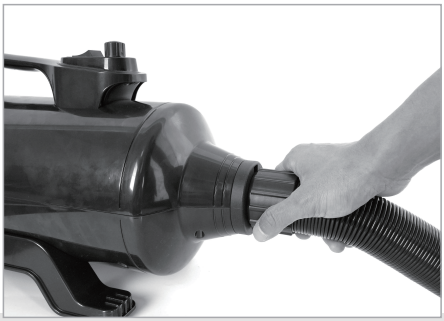

Install the hose joint in clockwise

Maintenance





- Please clean the sponge filter by washing or air blowing, be sure to fix the filter again when it´s dry.
- Keep the surface clean and dry, and use a dry and soft cloth to clean the painted surface.
- Wet cloth with neutral detergent and wipe to remove stubborn stains and dirt.
- Use only mild neutral detergent.
- When the carbon brushes run out, please renew the brushes following the guide line in this booklet or consult with the professors.

Warning

This dryer is only intended for the use of drying dogs.
The equipment must only be used by a trained professional.
If electrics or wires are damaged do not use.
Ensure there is no damage to the product before use.
Do not submerge in water. Do not get wet.
Ensure the room has good air flow to prevent overheating. Do not use if overheating.
Ensure hose is attached correctly before use.